MUSKINGUM COUNTY
COUNTY ROAD NO.8

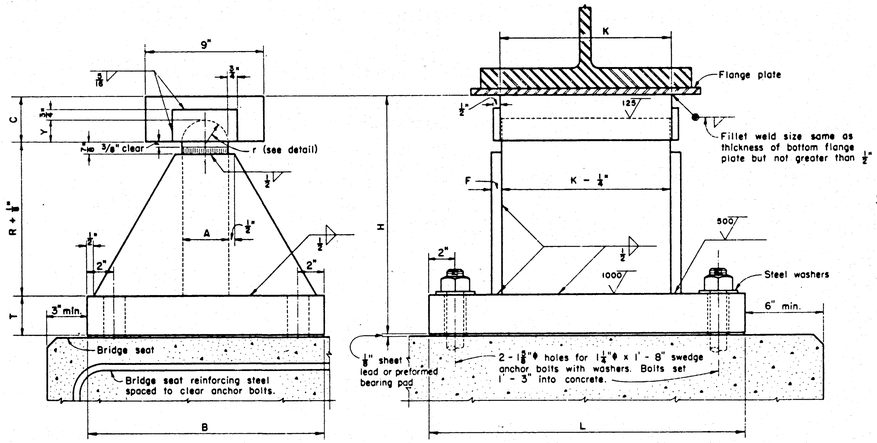

STRUCTURAL STEEL BOLSTER
See table below for additional dimensions.

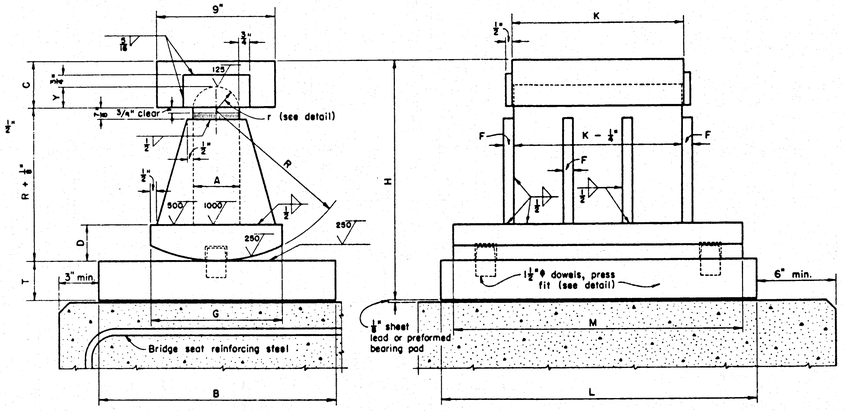

STRUCTURAL STEEL ROCKER
See table below for additional dimensions.

Bolster No.	Rocker No.	Dimensions (inches) A	B	C	D	F	G	H	K	L	M	R	T	Y	Weight each (lb.) Bolster	Rocker	Maximum Load (lb.)
	R-75	2 1/2	8	2 1/2	1 3/4	1/2	7	9 3/8	9	18	16	5 1/2	1 1/2	1 3/16		205	75,000
B-100	R-100	2 1/2	10	2 1/2	2	1/2	7 1/2	10 3/8	9	19	17	6 1/2	1 1/2	1 5/16	225	250	100,000
B-125	R-125	3	11	3	2	1/2	8	12 1/8	10 1/2	20	18	7 1/2	1 1/2	1 7/16	295	315	125,000
B-150	R-150	3	12	3	2 1/4	1/2	8 1/2	13 3/8	11 1/2	22	19	8 1/2	1 3/4	1 7/16	360	400	150,000
B-175	R-175	3	14	3 1/2	2 1/2	1/2	9	15 1/8	12	23	20	9 1/2	2	1 7/16	455	505	175,000
B-200	R-200	3	16	3 1/2	2 3/4	3/8	9	16 3/8	12	24	21	10 1/2	2 1/4	1 7/16	540	605	200,000
B-225	R-225	3	17	3 1/2	2 3/4	3/8	9	16 7/8	13	25	22	11	2 1/4	1 7/16	590	665	225,000
B-250	R-250	3 1/2	18	3 1/2	2 3/4	3/4	10	17 3/8	13	26	23	11 1/2	2 1/2	1 11/16	695	775	250,000
B-275	R-275	3 1/2	19	3 1/2	3 1/4	3/4	12	18 3/8	14	27	24	12	2 3/4	1 13/16	800	945	275,000
B-300	R-300	3 1/2	20	3 1/2	3 1/4	3/4	12	19 1/8	14	28	25	12 1/2	3	1 11/16	895	1050	300,000

Weights given are for one rocker or bolster complete (including sheet lead, anchor bolts and washers).

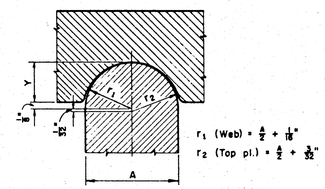

TOP BEARING DETAIL

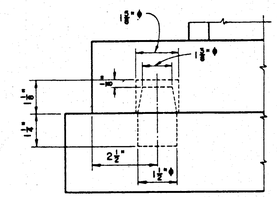

DOWEL DETAIL

DESIGN SPECIFICATIONS: This standard drawing conforms to the requirements of "Design Specifications for Highway Structures" of the State of Ohio, Department of Highways, dated October 1, 1951, together with revisions thereof dated July 15, 1952, April 1, 1954 and February 1, 1955.

LIMITATION: This rocker and bolster design shall not be used where the anticipated movement is in excess of 2 inches.

REVISIONS	
2-2-59	STATE OF OHIO DEPARTMENT OF HIGHWAYS DIVISION OF DESIGN AND CONSTRUCTION BUREAU OF BRIDGES
	STANDARD ROCKERS AND BOLSTERS FOR STEEL BEAM AND GIRDER BRIDGES REACTIONS 75,000 lb. TO 300,000 lb.
	APPROVED: DATE: 3-1-55 ENGINEER OF BRIDGES — DRAWING NUMBER RB-1-55
	PREPARED NPB CFB JCN WHR — TRACED JVP — CHECKED CEM BPH — REVIEWED CBD BFB CHA AJF DHO

REVISION	DATE	DESCRIPTION	BY
	3/23/62	AS CONSTRUCTED	H.F.K.

U. S. ARMY ENGINEER DISTRICT, HUNTINGTON
CORPS OF ENGINEERS
HUNTINGTON, W.VA.

DRAWN BY:
TRACED BY:
CHECKED BY:
SUBMITTED BY: Elmer S. Barrett — ELMER S. BARRETT ASSOCIATES
RECOMMENDED: CHIE ENG. DIV.

LICKING RIVER
DILLON RESERVOIR PROJECT
RELOCATION OF MUSKINGUM COUNTY ROAD NO. 8
MC-8-4 & MT-408-1 MC-8-1 & MC-408-1
ROCKERS & BOLSTERS
BRIDGE NO. MUS-8-0825
COUNTY ROAD NO. 8 OVER LICKING RIVER

APPROVED: Steven Malanch — COL. C. E. DISTRICT ENGINEER — DATE: NOVEMBER 1959

ELMER S. BARRETT ASSOCIATES
CONSULTING ENGINEERS
CHILLICOTHE, OHIO

SCALE: — SPEC. NO.
DRAWING NUMBER 027f-UD14-68/79
SHEET 79 OF 83

WORK AS CONSTRUCTED ROCKERS & BOLSTERS