FED. RD. DIVISION	STATE	PROJECT	
2	OHIO	S-522(3)	

10/14

MUSKINGUM COUNTY
CO. RD. 55

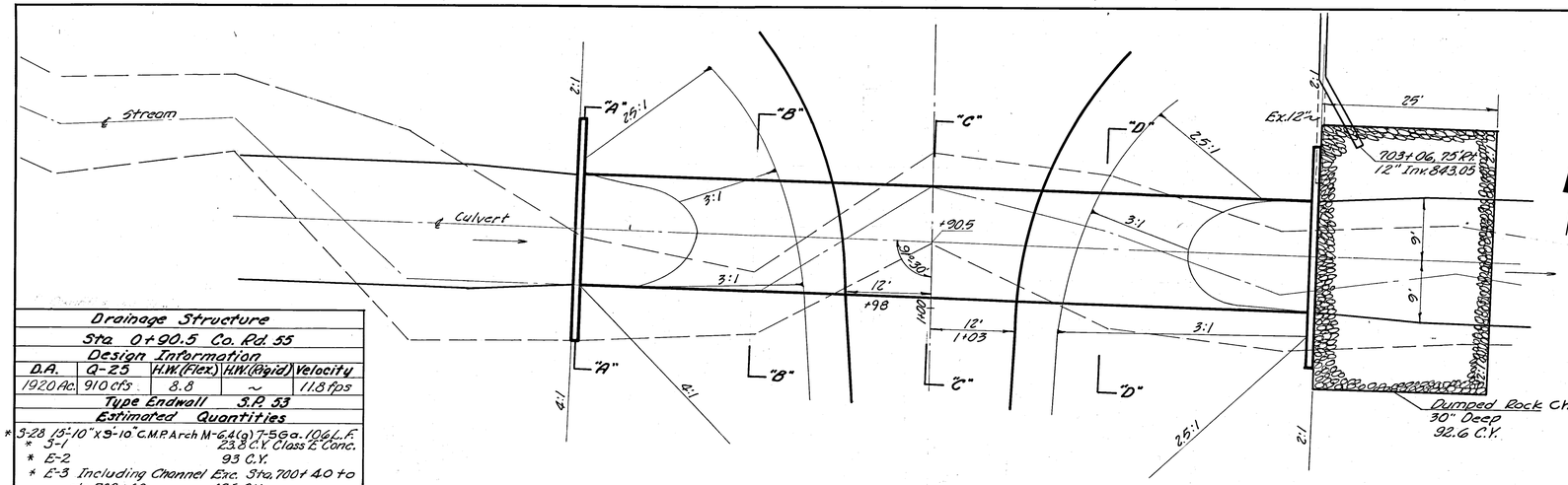

Drainage Structure				
Sta. 0+90.5 Co. Rd. 55				
Design Information				
D.A.	Q-25	H.W.(Flex.)	H.W.(Rigid)	Velocity
1920 Ac.	910 cfs	8.8	~	11.8 fps
Type Endwall S.P. 53				
Estimated Quantities				
* S-28 15'-10" x 9'-10" C.M.P. Arch M-6.4(g) 7-5 Ga. 106 L.F.				
* S-1 23.8 C.Y. Class E Conc.				
* E-2 93 C.Y.				
* E-3 Including Channel Exc. Sta. 700+40 to sta. 703+60 495 C.Y.				
*I-10 Dumped Rock Channel Prot. 92.6 C.Y.				

* State & Federal Participation

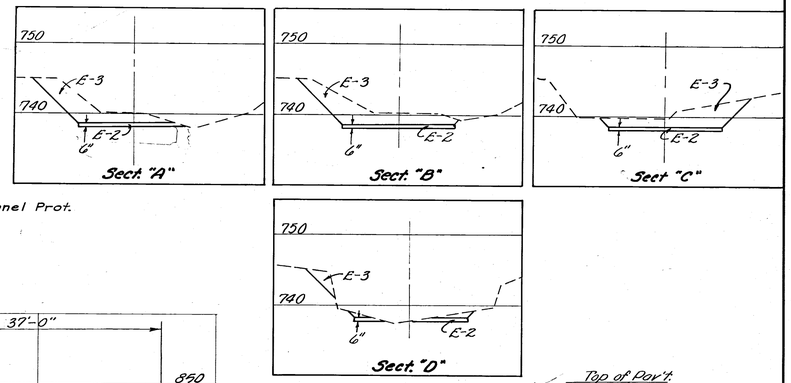

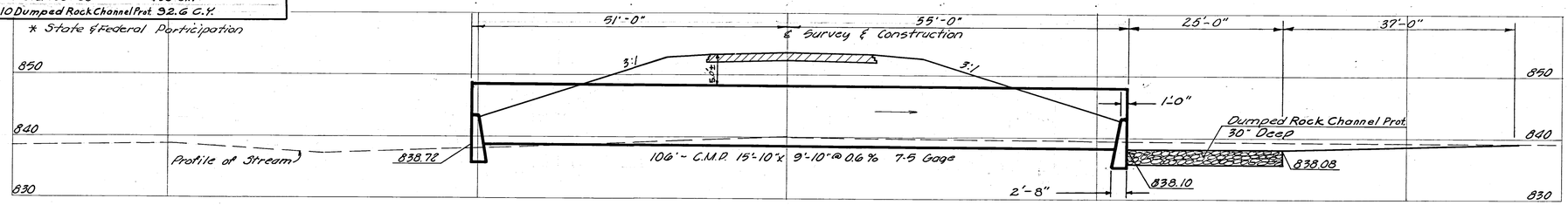

Scale Horiz. 1" = 10'
Vert. 1" = 10'

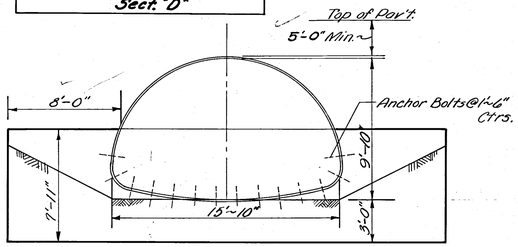

ENDWALL DETAILS
Scale 1" = 5'

Drainage Structure				
Sta. 2+20.0 Co. Rd. 55				
Design Information				
D.A.	Q-25	H.W.(Flex.)	H.W.(Rigid)	Velocity
94 Ac.	126 cfs	~	5.8	10 fps
Type Endwall P.C. 4				
Estimated Quantities				
S-27	48" R.C.P. [M-6.6(b)] 70 L.F.			
S-1	1.72 C.Y. Class "E" Conc.			
E-2	21.9 C.Y.			

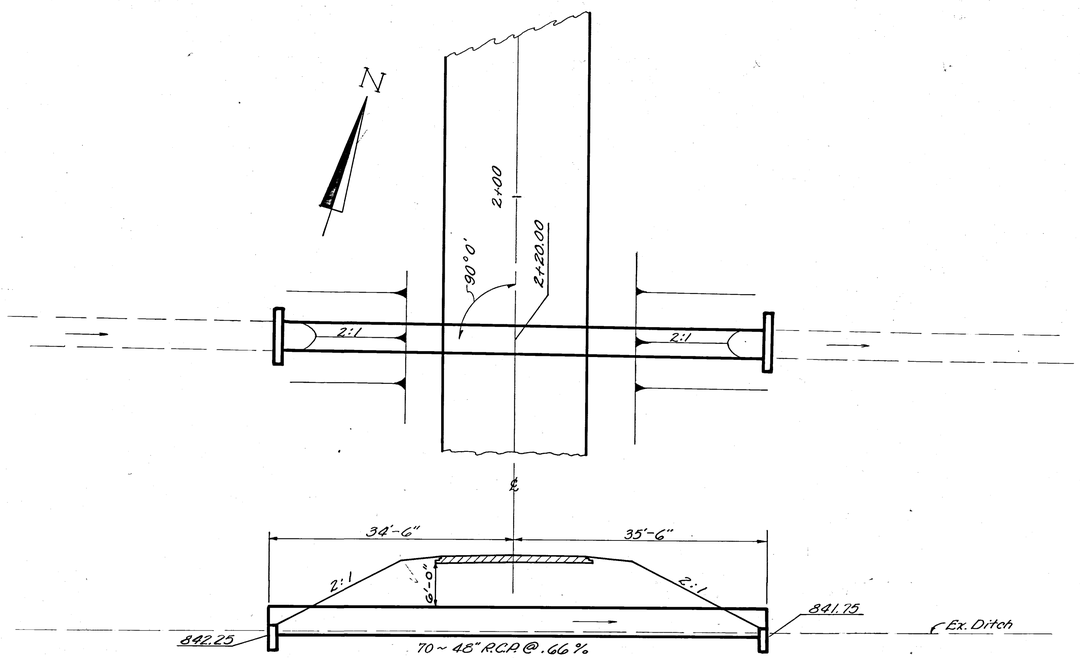

RECD DIV. 5 FEB 15 1968