FED. RD. DIVISION	STATE	PROJECT	
2	OHIO		

MUSKINGUM COUNTY
MUS.-60-31.70

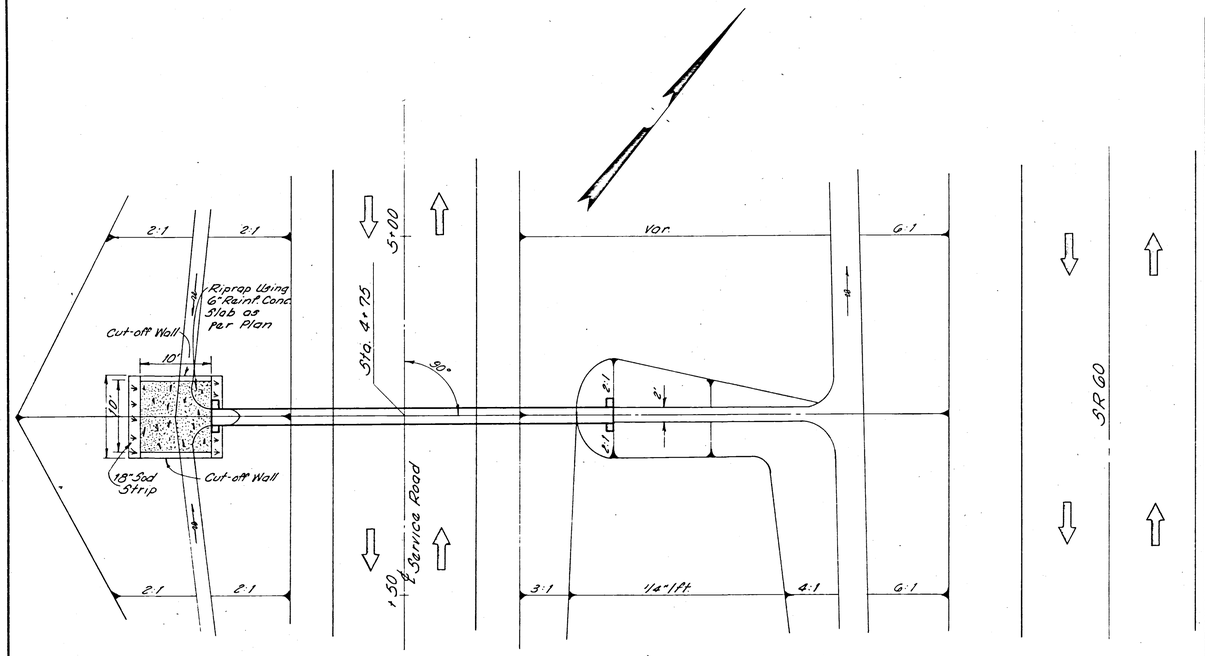

PLAN

Drainage Area = 6.91 Ac.
Q_{10} = 19 c.f.s.

ESTIMATED QUANTITIES

ITEM 603	30" Conduit Type "A" 706.02 or 706.03 with Cl. "B" Bedding	56 L.F.
ITEM 602	Concrete Masonry	2.41 C.Y.
ITEM 601	Riprap Using 6" Reinf. Conc. Slab as per Plan	11 S.Y.
ITEM 660	Sodding	3 S.Y.

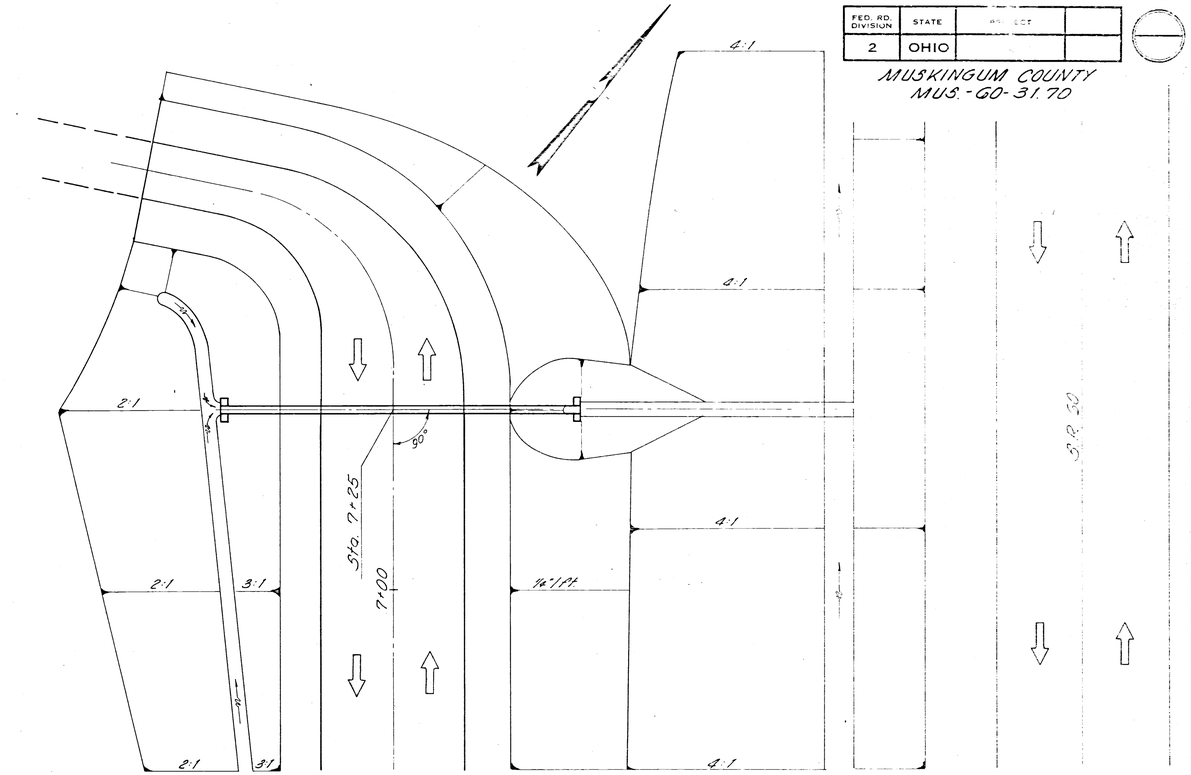

PLAN

Drainage Area = 2.0 Ac.
Q_{10} = 7.0 c.f.s.

ESTIMATED QUANTITIES

ITEM 603	15" Conduit Type "A" 706.01, 706.02 or 706.03 with Cl. "B" Bedding	50 L.F.
ITEM 602	Concrete Masonry	0.52 C.Y.

Note:
Reference made to Standard Drawings MC-4 & HW-E

Scale: Horz 1" = 10'
Vert 1" = 10'

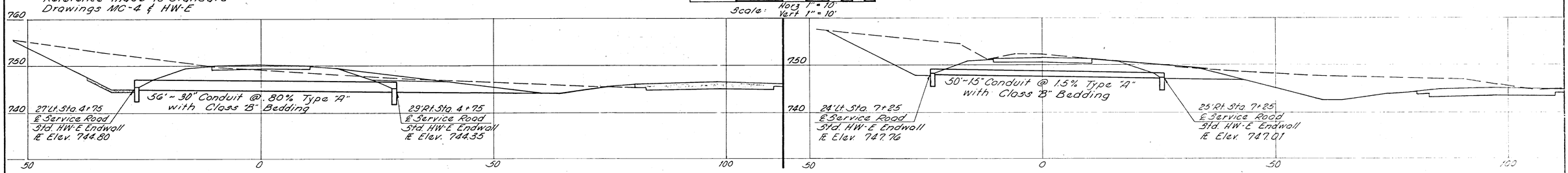

PROFILE

SERVICE ROAD CULVERT DETAIL STA. 4+75

SERVICE ROAD CULVERT DETAIL STA. 7+25