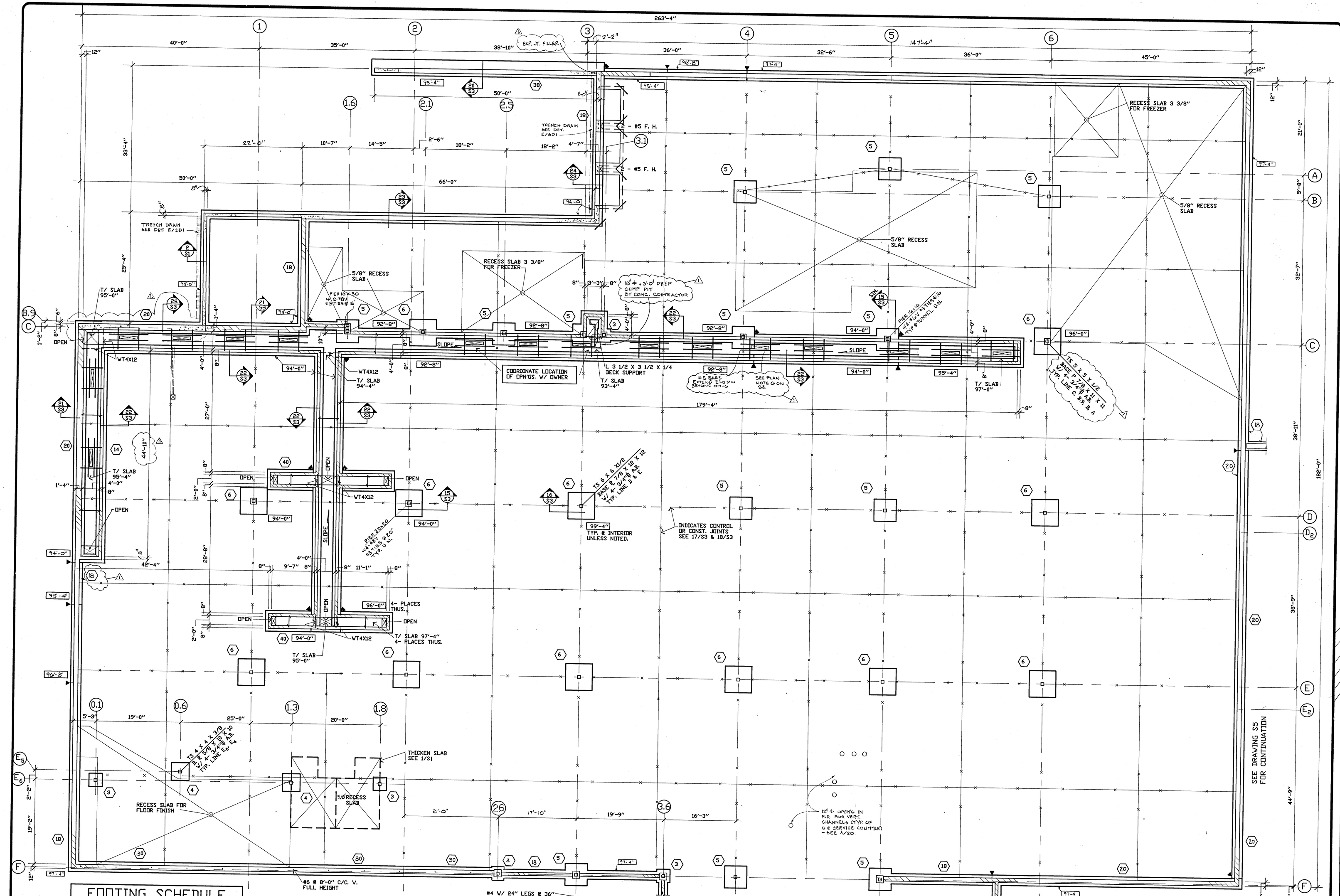

FOOTING SCHEDULE

MARK	SIZE	REINFORCING	REMARKS
14	1'-4" X 10"	2- #4 CONT.	
18	1'-8" X 10"	2- #5 CONT.	
20	2'-0" X 10"	2- #5 CONT.	
30	3'-0" X 12"	4- #4 CONT.	
30	3'-8" X 12"	5- #4 CONT.	SEE 20/S3
40	4'-0" X 14"	4- #7 CONT. #5@12" E.W.	PLACE BARS AT MID-DEPTH
3	3'-0"X 3'-0"X 1'-0"	4- #4 E.W.	
4	4'-0"X 4'-0"X 1'-0"	5- #5 E.W.	
5	5'-0"X 5'-0"X 1'-0"	6- #5 E.W.	
6	6'-0"X 6'-0"X 1'-2"	7- #5 E.W.	

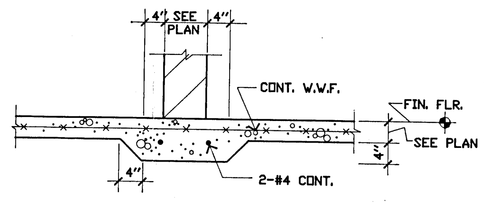

SECTION 1/S1

NO SCALE: TYP. THICKENED SLAB UNDER NON-BEARING WALL

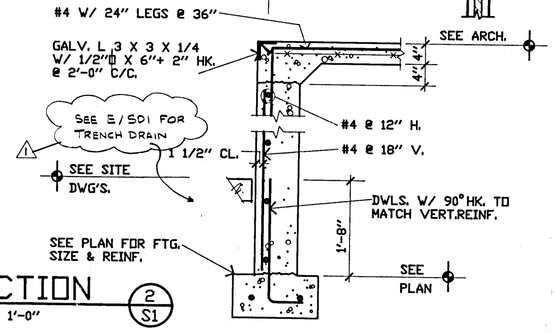

SECTION 2/S1

3/4" = 1'-0"

FOUNDATION PLAN

1/8" = 1'-0"

NORTH

1. VERIFY LOCATIONS OF COLUMNS, WALLS, OPENINGS, ETC. WITH ARCHITECTURAL DRAWINGS BEFORE PLACING FOUNDATIONS.
2. 4" SLAB ON GRADE WITH 6 x 6 x W1.4 x W1.4 W.W.F. TYPICAL EXCEPT AS NOTED. TOP OF SLAB ELEVATION 0'-0" EXCEPT AS NOTED. REF. EL. 100'-0" = ABSOLUTE EL. 796.55'.
3. DESIGN SOIL BEARING 3000 PSF. ANY SOFT SPOTS OR VARIATIONS IN SUBSURFACE CONDITIONS SHALL BE REPORTED IMMEDIATELY TO THE ENGINEER.
4. TOP OF FOOTINGS INDICATED ON PLAN THUS
5. REINFORCING STEEL INDICATED FOR FOOTINGS IS BOTTOM STEEL. THE LAST DIMENSION GIVEN FOR A FOOTING SIZE IS THE DEPTH.
6. FOOTINGS TO CENTER UNDER COLUMN OR WALL.
7. ▼ - INDICATES STEP IN FOOTING ON PLAN. SEE 19/S3.
8. ---x---x--- INDICATES FLOOR CONTROL AND/OR CONST. JOINT ON PLAN. SEE 17/S3 & 18/S3
9. ALL EXTERIOR FOOTINGS TO EXTEND MIN. OF 2'-6" BELOW FINISHED GRADE.
10. REFERENCE: GENERAL STRUCTURAL NOTES S4.
11. SEE ARCH. DRAWINGS FOR RECESS SLAB DIMENSIONS.
12. PROVIDE VAPOR BARRIER UNDER ALL INTERIOR SLABS - SEE ARCH.

© COPYRIGHT 1989 FIRESTONE JAROS MULLIN

REVISIONS
1 SEPT. 19, 1989

DATE SEPT. 5, 1989
COMM. NO. 8904

STATE OF OHIO REGISTERED PROFESSIONAL ENGINEER
WILLIAM A. MULLAND
RICHARD A. SHELLEY
44153

STATE OF OHIO REGISTERED ARCHITECTS
FIRESTONE JAROS MULLIN
DAVID A. STOKE
PETERSON KAPPROCKI

FIRESTONE JAROS MULLIN
ARCHITECTS AND PLANNING CONSULTANTS

MAPLE TREE PLAZA

2790 MAPLE AVENUE
ZANESVILLE, OHIO

SET OF 12
SHEET NO. S1

STEEL AND FOUNDATION PACKAGE 9-6-89