FHWA REGION	STATE	PROJECT	
5	OHIO		

O.L. 7-24-78
I.D. 5-22-79

34/41

MUS- CITY OF ZANESVILLE
TAYLOR STREET

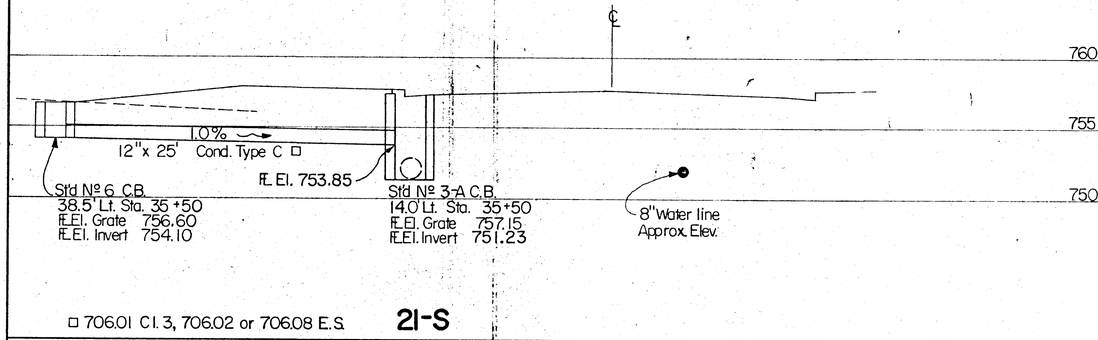

□ 706.01 Cl. 3, 706.02 or 706.08 E.S.

21-S

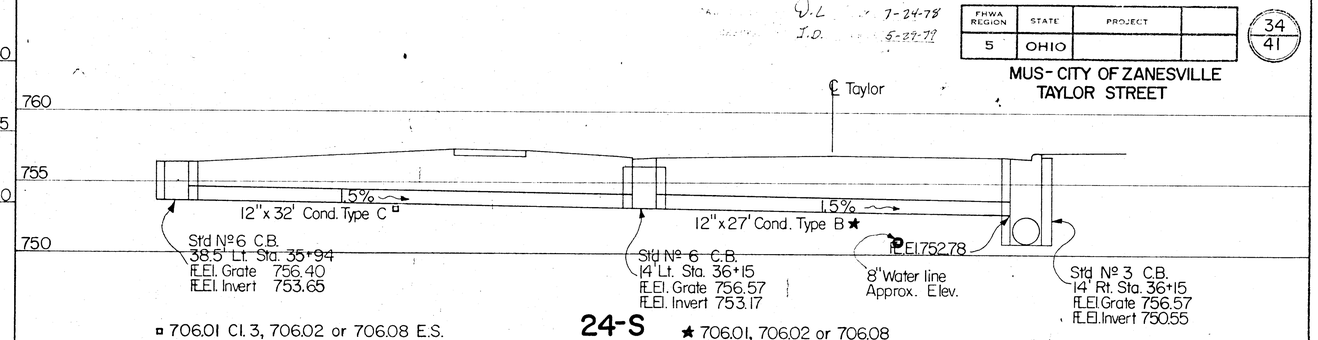

□ 706.01 Cl. 3, 706.02 or 706.08 E.S. **24-S** ★ 706.01, 706.02 or 706.08

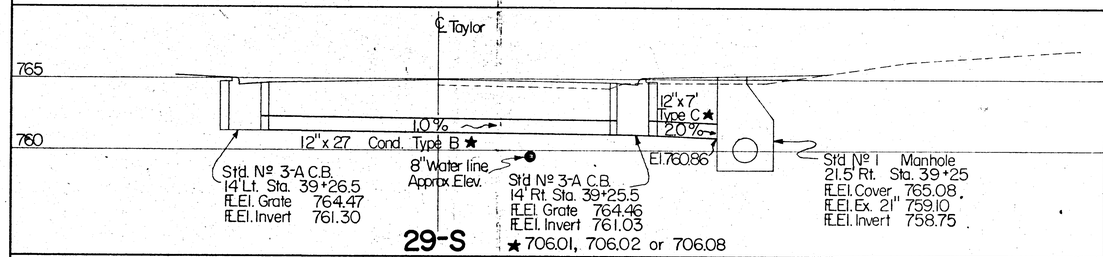

29-S ★ 706.01, 706.02 or 706.08

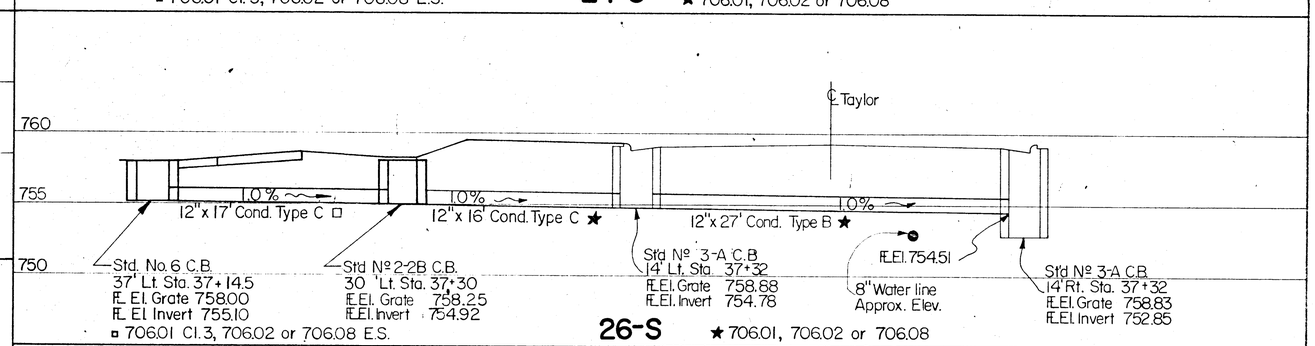

□ 706.01 Cl. 3, 706.02 or 706.08 E.S. **26-S** ★ 706.01, 706.02 or 706.08

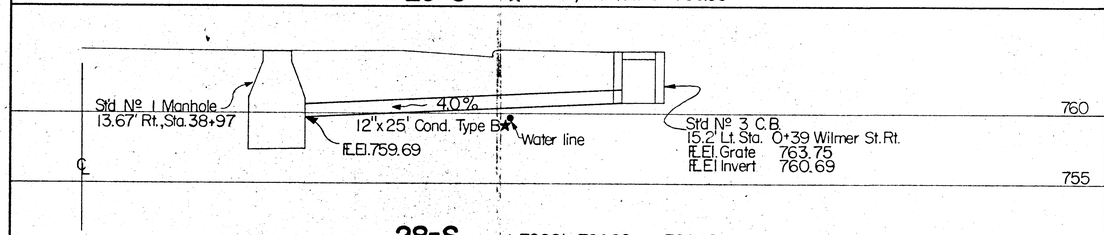

28-S ★ 706.01, 706.02 or 706.08

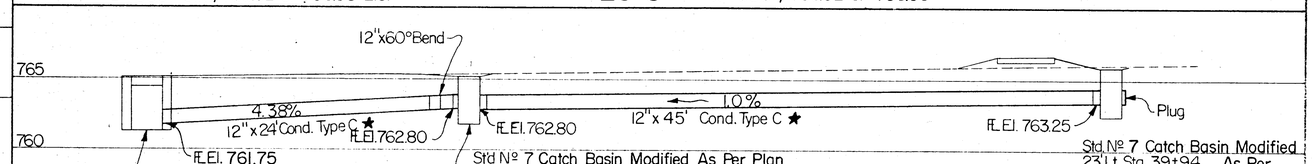

NOTE:
Modification shall be that a flat top grate shall be used Neenah R-4040 or approved equal.

30-S ★ 706.01, 706.02 or 706.08

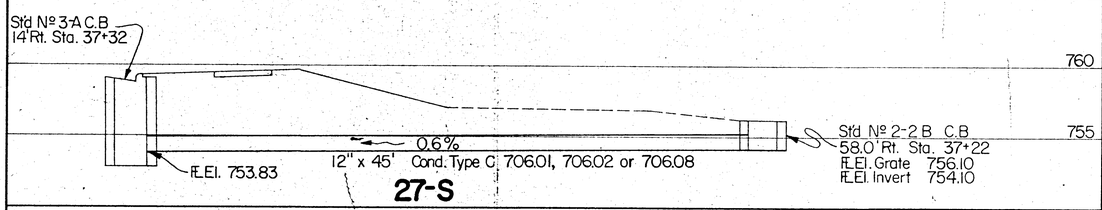

706.01, 706.02 or 706.08

27-S

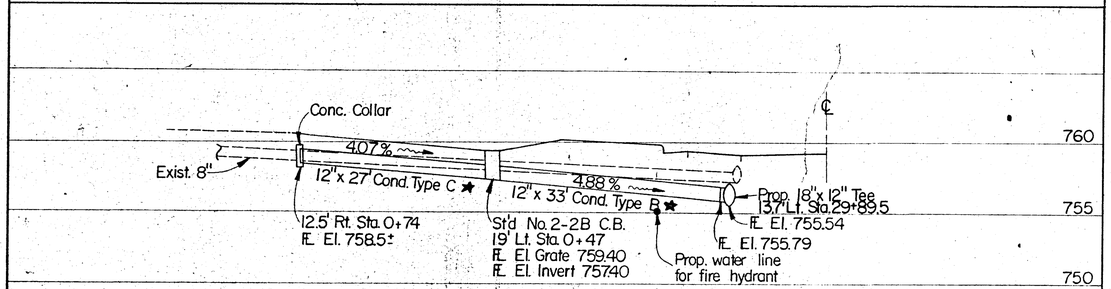

33-S ★ 706.01, 706.02 or 706.08

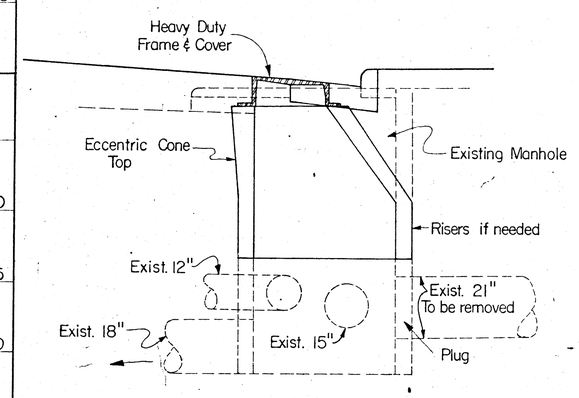

NOTE: This Item shall consist of removing the existing manhole down to the spring line reconstructing with Std. No. 3 manhole, Eccentric cone top, and risers as needed, and using heavy duty frame and cover. The existing castings shall be removed and disposed of as directed by the Project Engineer.

MANHOLE RECONSTRUCTED TO GRADE AS PER PLAN STA. 39+05.4

STORM SEWER DETAILS